IOT

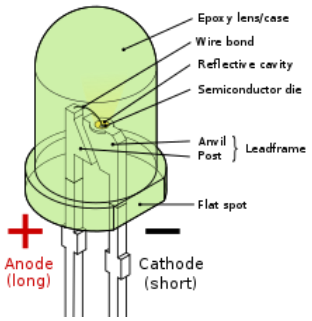

LED

- LED stand for “Light Emitting Diode”.
- It is a semiconductor device that emits light when an electric current passes through it.
- Led are commonly used in a wide range of applications including lighting, display, indicator light, decorative light, traffic signal and flashlight.

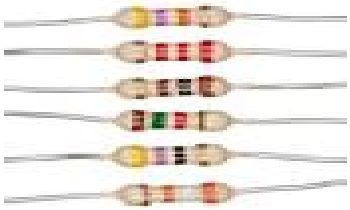

CAPACITOR

- A capacitor is an electrical component that stores and releases electrical energy in the form of an electric field.
- The capacitance of a capacitor, denoted by the symbol “c” and measured in farads, represents its ability to store charge.

TRANSISTOR

- Transistors are semiconductor devices that serve as fundamental building blocks in modern electronic circuits.
- Transistors can amplify or control the flow of electrical current in a circuit.

SWITCH

- A switch is a simple electronic device that is used to control the flow of electric current in a circuit.
- Switches are commonly used in various applications to turn devices on or off.

RELAY

- A relay is an electrical switch that uses an electromagnet to control the opening and closing of one or more sets of electrical contacts.
- It allows a low-power electrical signal to control a high-power electrical circuit.
- It can be used in home automation, automation and control system and telecommunication.

DIODE

- A diode is a two-terminal semiconductor device that primarily allows the flow of electric current in one direction while blocking it in the opposite direction.
- Diodes are used in a wide range of applications including power supplies, signal rectification and voltage regulation.

DC MOTOR

- A DC motor is an electrical machine that converts electrical energy into mechanical energy by utilizing the interaction between a magnetic field and current-carrying conductors.
- It is used in fans, electric vehicles and CNC machines

SERVO MOTOR

- A servo motor is an electromechanical device that can accurately control the position, speed and torque of its output shaft.
- It is commonly used in applications requiring precise control of linear position, such as robotics, industrial automation and CNC machinery.

ULTRASONIC SENSOR

- An ultrasonic sensor is a device that uses sound waves with frequencies higher than the range of humans typically above 20000 Hz to measure distances or detect objects.
- It is used in obstacle detecting, level measurement, proximity sensing.

PIR SENSOR

- A passive infrared sensor is a type of motion sensor that detects changes in infrared radiation in its field of view.
- These sensors are widely used for detecting motion in various applications including security systems, lighting control and home automation.

BUZZER

- A buzzer is an electronic sound producing device that generates a continuous or intermittent sound when an electrical current is applied to it.
- Buzzers are used for various purposes, such as indicating an event, providing an audible alert or producing sound effects in electronic devices and systems.

LDR

- LDR stands for Light Dependent Resistor, which is also known as a photoresistor.
- It is an electronic component that exhibits a change in electrical resistance with varying levels of light intensity.
- LDRS are widely used in applications where it is necessary to detect or control light levels.

POTENTIOMETER

- A potentiometer is a three- terminal variable resistor that is widely used in electrical and electronic circuits to provide variable resistance and voltage resistance and voltage division.
- Potentiometers are versatile components and are used in a variety of applications where adjustment of voltage or signal level is required.

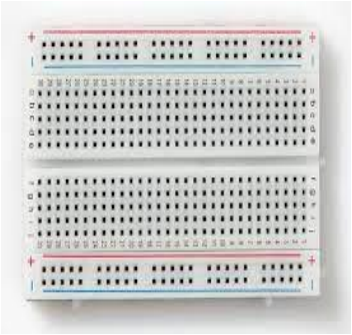

BREADBOARD

- It is a board with a grid of holes and metal clips or contacts underneath that allow electronic components to be easily connected without soldering.
- Breadboards are essential for testing and building electronic circuits during the design and development phase.

EXPERIMENTS

1. LED Blinking:

- **Circuit Diagram:**

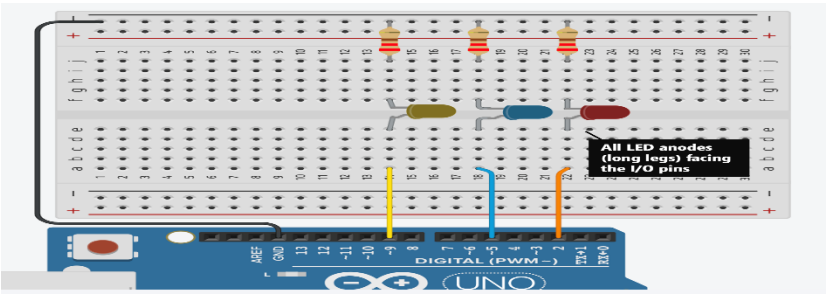

- **CODE**

```
void setup() {
  pinMode(4,OUTPUT);
}
void loop() {
  digitalWrite(4,HIGH);
  delay(1000);
  digitalWrite(4,LOW);
  delay(1000);
}
```

2. LED Pattern:

- **Circuit Diagram:**

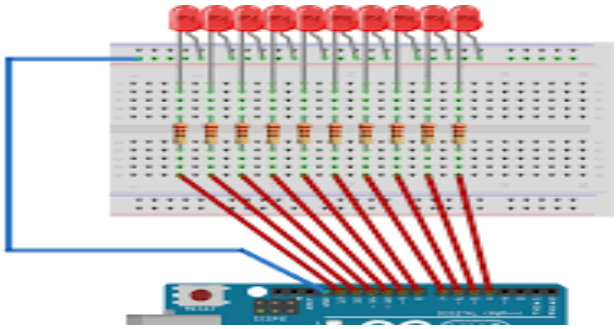

- **CODE**

```
void setup() {
  pinMode(1,OUTPUT);
  pinMode(2,OUTPUT);
  pinMode(6,OUTPUT);
  pinMode(7,OUTPUT);
  pinMode(8,OUTPUT);
}
void loop() {
  digitalWrite(1,HIGH);
  delay(1000);
  digitalWrite(2,HIGH);
  delay(1000);
  digitalWrite(6,HIGH);
  delay(1000);
  digitalWrite(7,HIGH);
  delay(1000);
  digitalWrite(8,HIGH);
  delay(1000);
  digitalWrite(1,LOW);
  digitalWrite(2,LOW);
  digitalWrite(6,LOW);
  digitalWrite(7,LOW);
  digitalWrite(8,LOW);
  delay(1000);
}
```

3. LDR:

- **Circuit Diagram:**

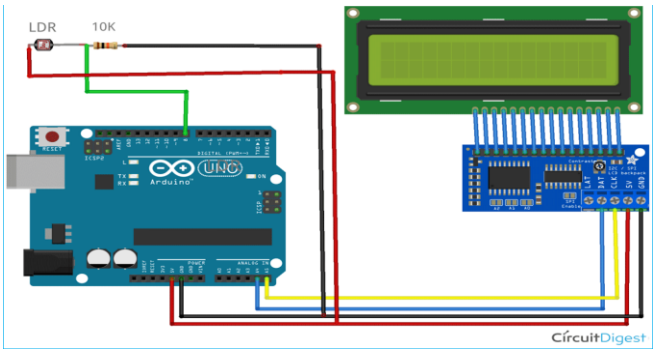

- **CODE**

```
int pot_meter = A0;
int x;
void setup() {
  Serial.begin(9600);
  pinMode(A0, INPUT);
}

void loop(){
x = analogRead(pot_meter);
Serial.println(x);
delay(1000);

}
```

4. MOISTURE SENSOR:

- **Circuit Diagram:**

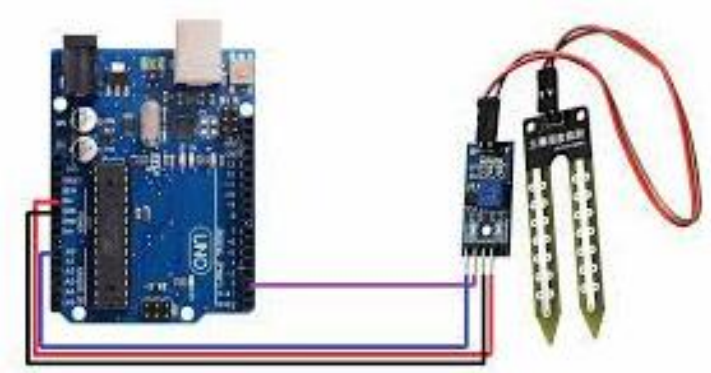

- **CODE:**

```
int mois_sensor = A0;
int x;
void setup() {
  Serial.begin(9600);
  pinMode(mois_sensor, INPUT);
}
void loop(){
x = analogRead(mois_sensor);
Serial.println(mois_sensor);

if(mois_sensor>=1000){
  Serial.println("full moisture");
}
else if(mois_sensor>=700 && mois_sensor<500){
  Serial.println("medium moisture");
}
else if(mois_sensor<=400){
  Serial.println("no moisture");
}
delay(1000);

}
```

5. POTENTIOMOTOR:

- **Circuit Diagram:**

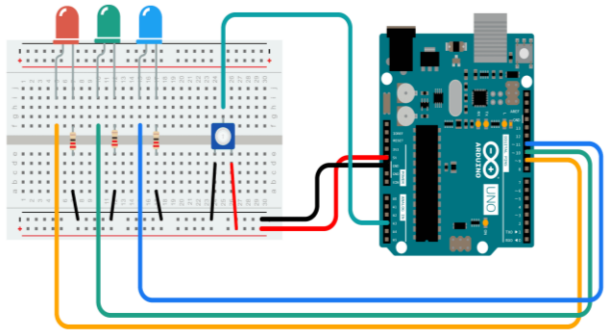

- **CODE:**

```
int pot_meter = A0;
int x;
void setup() {
  Serial.begin(9600);
  pinMode(A0, INPUT);
}

void loop(){
x = analogRead(pot_meter);
Serial.println(x);
delay(1000);

}
```

6. Servo Meter:

- **Circuit Diagram:**

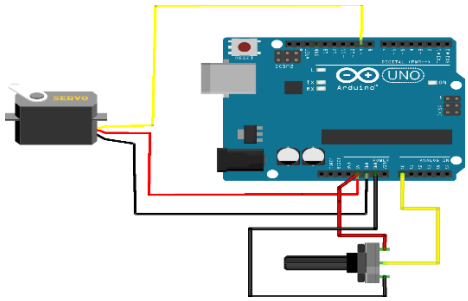

- **CODE:**

```
#include <Servo.h>

Servo myservo;  // create servo object
// twelve servo objects can be created

int pos = 0;    // variable to store th

void setup() {
  myservo.attach(9);  // attaches the s
}

void loop() {
  for (pos = 0; pos <= 180; pos += 1) {
    // in steps of 1 degree
    myservo.write(pos);                //
    delay(15);                         //
  }
  for (pos = 180; pos >= 0; pos -= 1) {
    myservo.write(pos);                //
    delay(15);                         //
  }
}
```